NOT TO BE PUBLISHED

GUNS, MACHINE, CAL. ·30, BROWNING, M1919A4

FIXED AND FLEXIBLE

ILLUSTRATED IDENTIFICATION LIST

C.O.D.
(Technical Branch)
WEEDON

May, 1942

FOREWORD

For guide to easy reference, it is pointed out that the components of these weapons are arranged in Group order, numerical sequence of American Catalogue Numbers being followed in each grouping.

British Designation and Catalogue Numbers are merely shown to enable any necessary reconciliation with American Numbers to be made, and under no circumstances will be used.

" S.N.L. A.6 " in addition to American Designations and Numbers will always be quoted on all Demands and other documents relating to these weapons.

The following shows the Group and appropriate page numbers :—

Back plate group (fixed gun)	Page 5
Back plate group (flexible gun)	Page 7
Casing group	Page 9
Cover group	Page 11
Rear sight group	Page 13
Bolt group	Page 15
Barrel extension and lock frame group	Page 17
Front sight group	Page 19
Tripod mount and accessories	Pages 21, 23, 25, 27

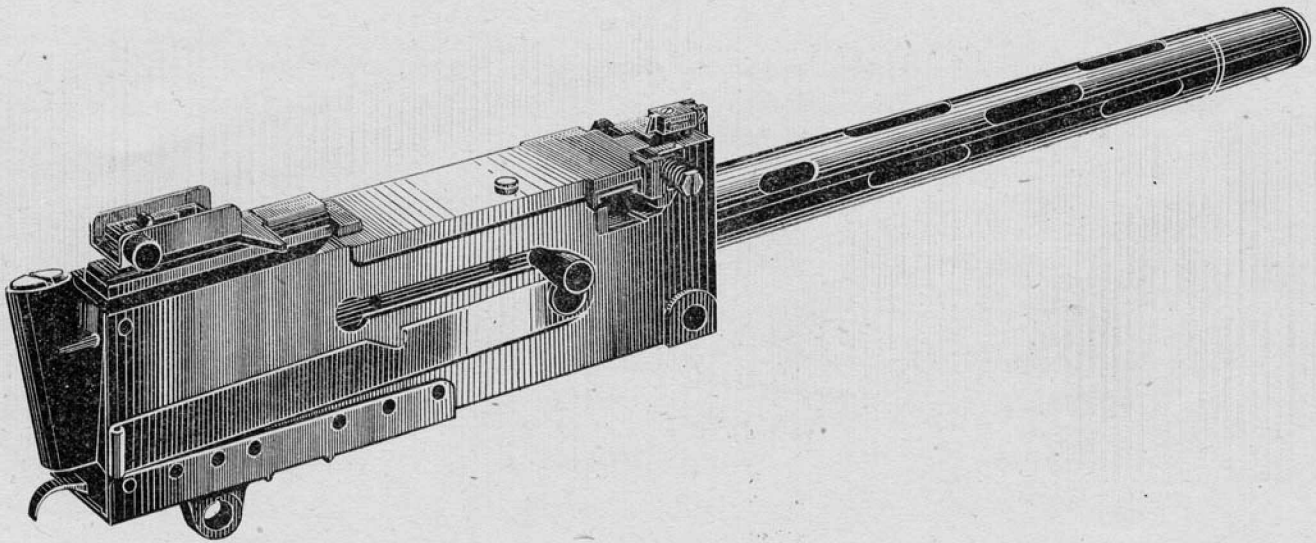

51-83 GUN MACHINE CAL. ·30, BROWNING, M1919A4 FIXED

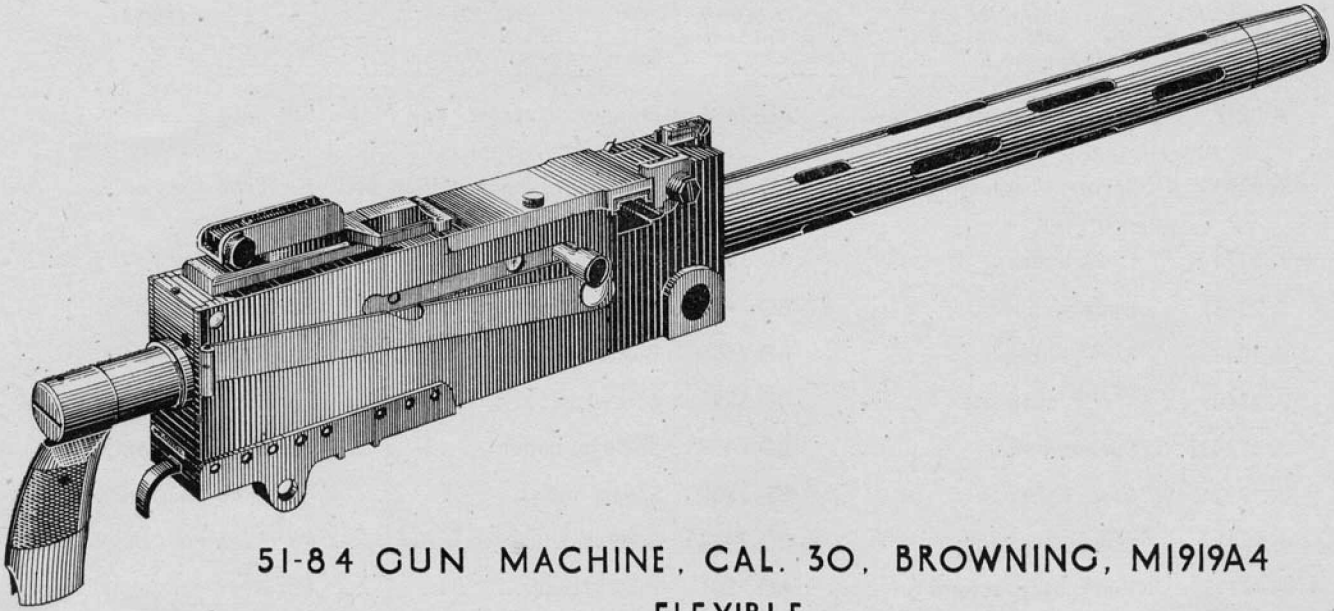

51-84 GUN MACHINE, CAL. 30, BROWNING, M1919A4
FLEXIBLE

AMERICAN S.N.L. NO.	AMERICAN S.N.L. DESIGNATION.	FORMER WEEDON CAT. NO.	ENGLISH DESIGNATION.	REMARKS.
A 9278	Plunger, adjusting screw ...	BD 7497	Plungers, screw adjusting buffer.	For fixed guns only.
A 9300	Spring, adjusting screw plunger.	BD 5945	Springs, plunger, buffer adjusting screw.	For fixed guns only.
A 9374	Disk, buffer	BD 5520	Discs, buffer...	For fixed and flex. guns.
A 20482	Buffer, upper	BD 7496	Buffer, upper	For fixed guns only.
A 20483	Buffer, lower	BD 7495	Buffers, lower	For fixed guns only.
A 20609	Screw, stop latch	BD 5596	Screws, stop, catch, cover...	For fixed and flex. guns.
A 172433	Spring, buffer	BD 7499	Springs, buffer	For fixed guns only.
A 173245	Stop, buffer	BD 7500	Stops, buffer	For fixed guns only.
B 9833	Screw, adjusting	BD 7498	Screws, adjusting buffer ...	For fixed guns only.
B 147159	Plate, back, assembly ...	BD 7501	Plates, back	For fixed guns only.
C 64269	Plate, back, assembly, complete.			For fixed guns only.

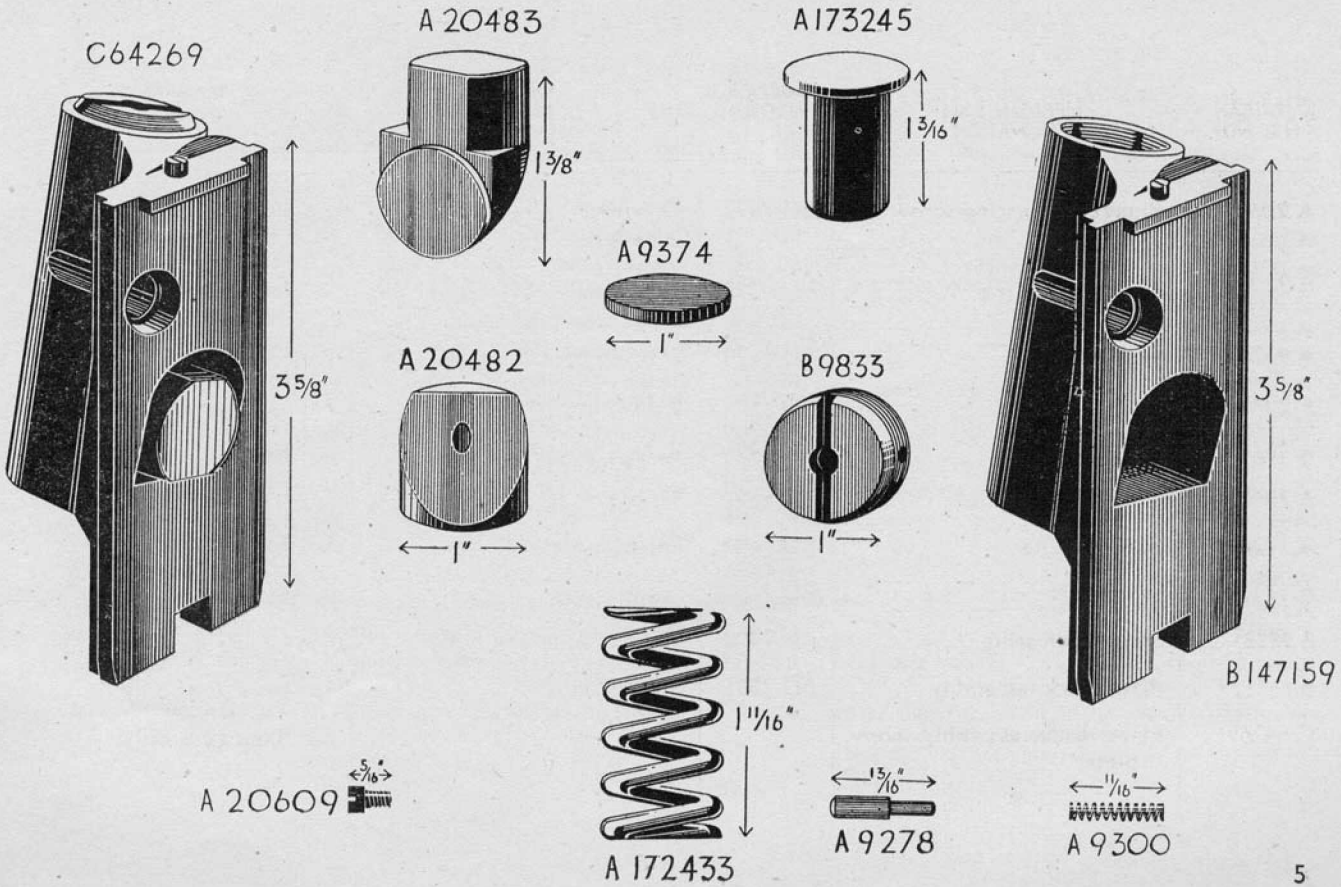
C64269
3 5/8"
A 20483
1 3/8"
A173245
1 3/16"
A9374
1"
A 20482
1"
B9833
1"
3 5/8"
B147159
1 11/16"
A 172433
A 20609
5/16"
13/16"
A 9278
11/16"
A 9300

AMERICAN S.N.L. NO.	AMERICAN S.N.L. DESIGNATION.	FORMER WEEDON CAT. NO.	ENGLISH DESIGNATION.	REMARKS.
A 9374	Disk, buffer	BD 5520	Discs, buffer	For fixed and flex. guns.
A 20550	Escutcheon, stock, left..	BD 5522	Cups, countersunk	For flex. guns only.
A 20551	Escutcheon, stock, right	BD 5523	Cups, screwed	For flex. guns only.
A 20581	Plate, buffer	BD 5566	Plates, buffer	For flex. guns only.
A 20609	Screw, stop, latch	BD 5596	Screws, stop, catch cover	For fixed and flex. guns.
A 20613	Screw, stock	BD 5595	Screws, stock, side	For flex. guns only.
A 64009	Stock, assembly..	BD 7439	Stocks (aluminium w/– cups, screwed and countersunk).	For flex. guns only.
A 130473	Stop, buffer	BD 7440	Stops, buffer	For flex. guns only.
A 135052	Plunger, adjusting screw	BD 5572	Plungers, screw, adjusting buffer ..	For flex. guns only.
A 135053	Spring, adjusting screw plunger ..	BD 5603	Springs, plunger, buffer adjusting screw	For flex. guns only.
A 139969	Spring, stock	BD 7438	Springs, stock	For flex. guns only.
A 139981	Spring, buffer	BD 7433	Springs, buffer	For flex. guns only.
A 160497	Filler, buffer	BD 7455	Distance-pieces, buffer	For flex. guns only.
B 134059	Screw, adjusting	BD 5584	Screws, adjusting buffer..	For flex. guns only.
C 64004	Plate, back, assembly	BD 7417	Plates, back (w/– pistol grip)	For flex. guns only.
C 64010	Plate, back, w/– buffer and stock assembly.	BD 7461	Plates, back (w/– buffer and stock assembled).	For flex. guns only.
BCLX3EG	Screw, mach., fl-hd., corrosion resisting—steel, No. 8 (·164)–36NF–3 × ½ (for stock spring).	BD 7476	Screws, spring, stock	For fixed and flex. guns.

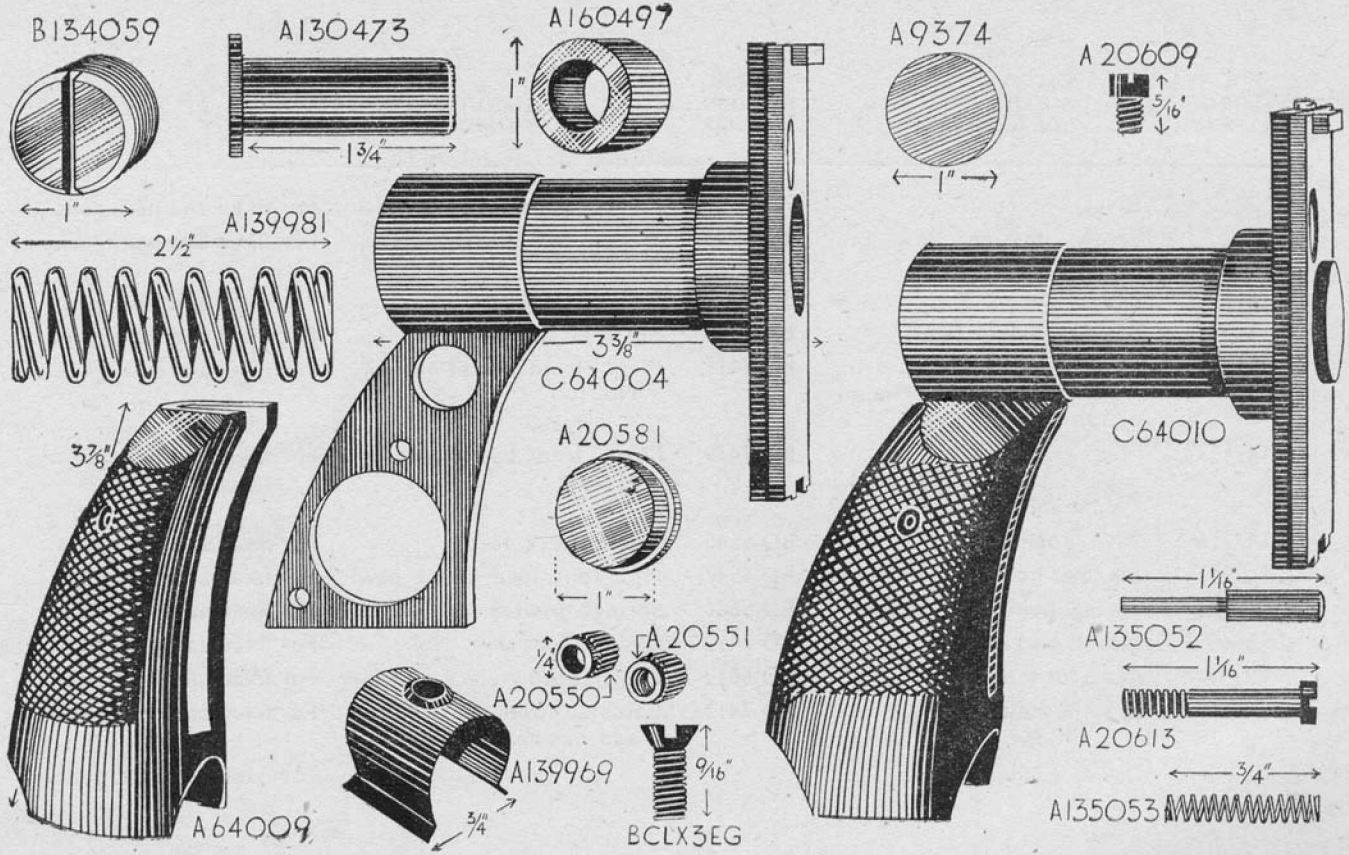
B134059
1"
A130473
1 3/4"
A160497
1"
A9374
1"
A20609
5/16"
A139981
2 1/2"
3 3/8"
C64004
3 7/8"
A64009
A20581
1"
C64010
1 1/16"
A135052
1 1/16"
A20613
3/4"
A135053
1/4"
A20550
A20551
A139969
3/4"
9/16"
BCLX3EG

AMERICAN S.N.L. NO.	AMERICAN S.N.L. DESIGNATION.	FORMER WEEDON CAT. NO.	ENGLISH DESIGNATION.	REMARKS.
A 13257	Rivet, bolt latch	BD 7423	Rivets, plates, safety catch	For fixed and flex. guns.
A 20527	Screw, breech lock cam (thick head).	BD 6935	Screws, cam locking piece...	For fixed and flex. guns.
B 131295	Latch, bolt	BD 7414	Plates, safety catch	For fixed and flex. guns.
B 146750	Bearing, barrel, front ...	BD 7409	Bearings, barrel, front ...	For fixed and flex. guns.
B 147157	Plug, front, barrel bearing (for Cal. ·30 M.I ammunition only).	BD 7418	Plugs, front barrel bearing, No. 1.	For fixed and flex. guns.
B 147157A	Plug, front, barrel bearing (for Cal. ·30 M.1906 or M.2 ammunition only).	BD 7419	Plugs, front barrel bearing, No. 2.	For fixed and flex. guns.
B 147216	Pawl, holding, belt	BD 5545	Pawls, check, feed	For fixed and flex. guns.
B 147217	Pin, belt holding pawl (split)	BD 5547	Pins, split, feed, check pawl	For fixed and flex. guns.
B 147225	Spring, belt holding pawl ...	BD 5606	Springs, pawl check feed ...	For fixed and flex. guns.
C 62503	Jacket, barrel	BD 7412	Casings, barrel	For fixed and flex. guns.
C 64133	Cam, lock, breech	BD 5512	Cams, locking-piece ...	For fixed and flex. guns.
C 64247	Latch assembly	BD 7413	Catches, cover (w/– spring and handle assembled).	For fixed and flex. guns.
D 35358	Casing, assembly			For fixed and flex. guns.

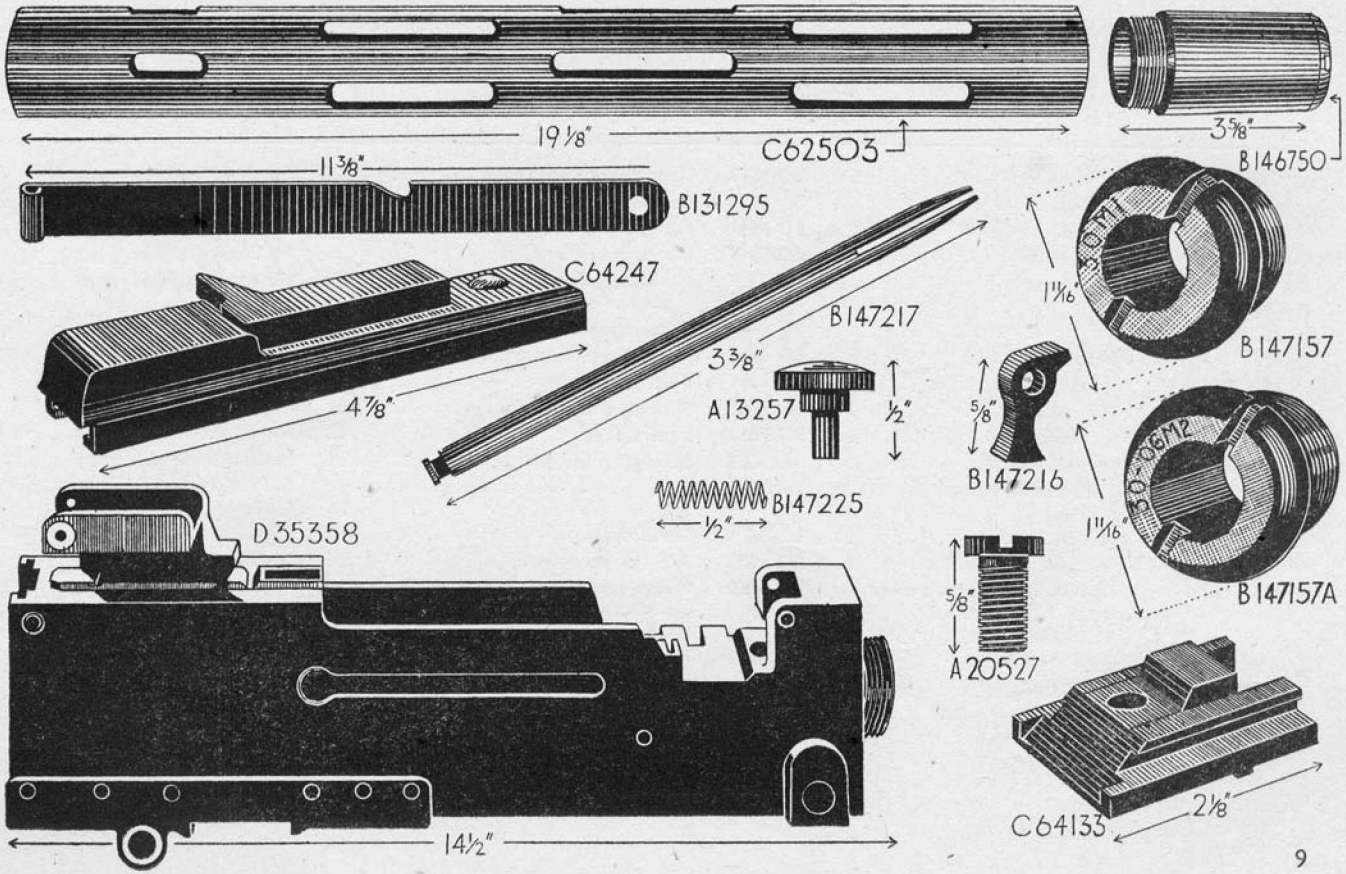
19 1/8"
C62503
3 5/8"
B146750
11 3/8"
B131295
C64247
4 7/8"
B147217
3 3/8"
A13257
1/2"
1 1/16"
B147157
5/8"
B147216
B147225
1/2"
D35358
1 1/16"
B147157A
5/8"
A20527
C64133
2 1/8"
14 1/2"

AMERICAN S.N.L. NO.	AMERICAN S.N.L. DESIGNATION.	FORMER WEEDON CAT. NO.	ENGLISH DESIGNATION.	REMARKS.
A 152730	Cap, belt feed lever pivot	BD 5513	Caps, pivot, feed lever	For fixed and flex. guns.
A 157374	Bushing, belt feed lever pivot ..	BD 5510	Bushes, pivot, feed lever	For fixed and flex. guns.
A 157433	Nut, belt feed lever pivot housing ..	BD 5541	Nuts, bush, feed lever pivot	For fixed and flex. guns.
A 157434	Pivot, belt feed lever	BD 5561	Pivots, lever feed, Mk. II	For fixed and flex. guns.
B 8757	Catch, cover, assembly	BD 7454	Plates, stop, cover, w/– bolt, nut, spring pin and plates.	For fixed and flex. guns.
B 8822	Plate, fixed	BD 7463	Plates, stop cover, fixed	For fixed and flex. guns.
B 8823	Plate, movable	BD 7464	Plates, stop, cover, movable	For fixed and flex. guns.
B 8824	Bolt, cover	BD 7451	Bolts, axis, cover..	For fixed and flex. guns.
B 8825	Spring, cover catch	BD 7480	Springs, plates, stop, cover	For fixed and flex. guns.
B 17503	Lever, feed belt..	BD 7457	Levers, feed	For fixed and flex. guns.
B 17513	Spring, cover, extractor	BD 5608	Springs, guide, transporter	For fixed and flex. guns.
B 131255	Pin, belt, feed pawl, assembly ..	BD 5546	Pins, pawl, feed slide (with spring assembled).	For fixed and flex. guns.
B 131262	Slide, feed belt, assembly	BD 5602	Slides, feed (w/– stud)	For fixed and flex. guns.
B 147224	Spring, belt feed pawl, ·032 wire ..	BD 6940	Springs, pawl, feed	For fixed and flex. guns.
B 147304	Pivot, belt feed lever, group assembly	BD 5560	Pivots, lever, feed, Mk. I (w/– bush, nut and cap assembled).	For fixed and flex. guns.
C 8461	Pawl, feed belt (serrated)	BD 5544	Pawls, slide, feed..	For fixed and flex. guns.
C 9801	Cover, assembly	BD 7411	Covers, assembled	For fixed and flex. guns.
BBFXIA	Nut, ctl., $\frac{1}{4}$–28NF–2 (for cover catch)	BD 7458	Nuts, bolt, axis cover	For fixed and flex. guns.
BFAXIBD	Pin, cotter, split, S. (type B) $\frac{1}{16} \times \frac{5}{8}$ (for belt feed lever pivot (I); cover catch (I)).	BD 7459	Pins, split, bolt axis cover	For fixed and flex. guns.

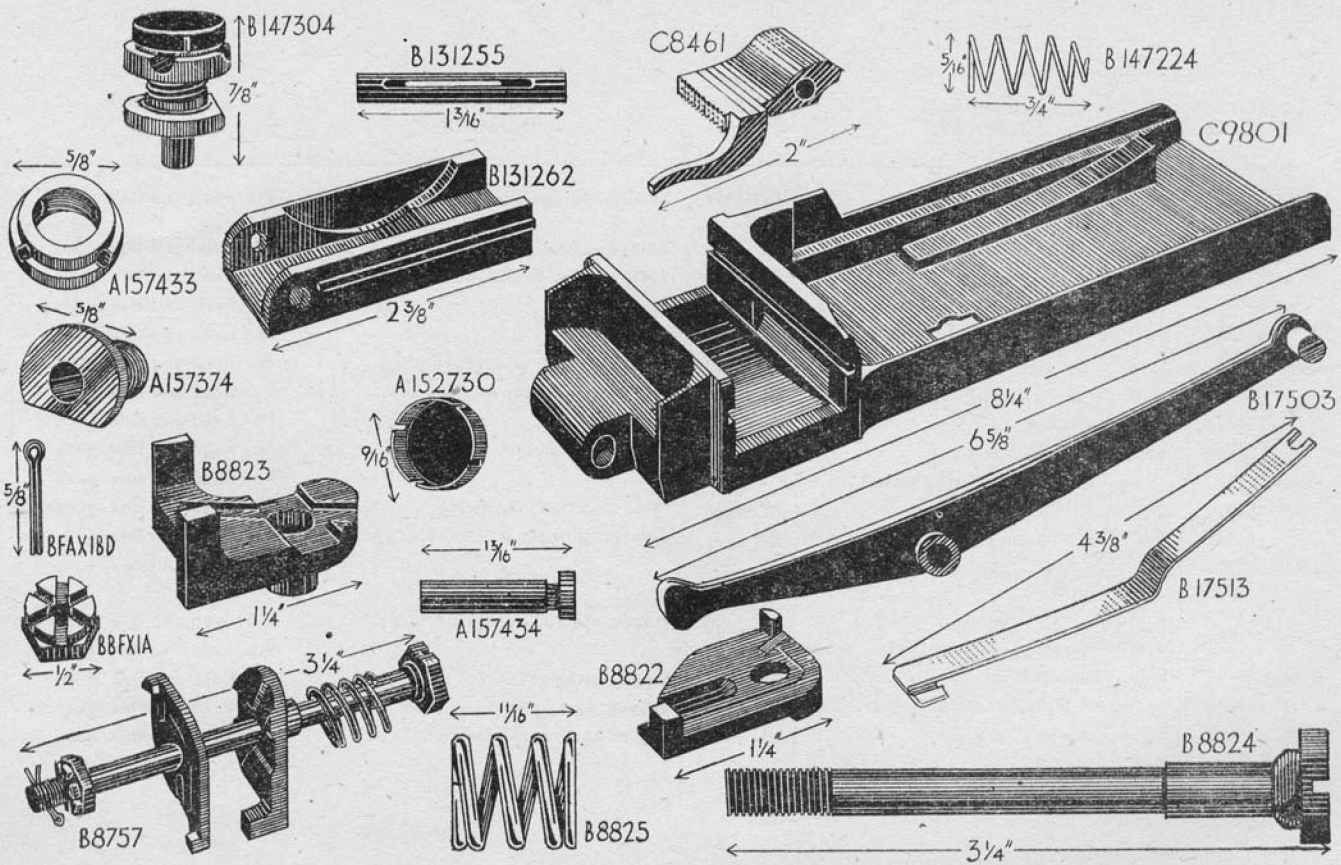
B147304
7/8"
B131255
1 3/16"
C8461
2"
5/16"
B147224
3/4"
C9801
5/8"
A157433
B131262
2 3/8"
5/8"
A157374
A152730
9/16"
8 1/4"
6 5/8"
B17503
5/8"
BFAX18D
B8823
1 1/4"
1 3/16"
A157434
4 3/8"
B17513
BBFXIA
1/2"
3 1/4"
B8822
1 1/16"
1 1/4"
B8824
B8757
B8825
3 1/4"

AMERICAN S.N.L. NO.	AMERICAN S.N.L. DESIGNATION.	FORMER WEEDON CAT. NO.	ENGLISH DESIGNATION.	REMARKS.
A 13154	Spring, rear sight windage click plunger.	BD 7437	Springs, plunger, head, windgauge screw	For fixed and flex. guns.
A 13155	Plunger, rear sight windage click ..	BD 7421	Plungers, head, windgauge screw ..	For fixed and flex. guns.
A 13157	Spring, rear sight base..	BD 6943	Springs, bed, backsight	For fixed and flex. guns.
A 13162	Pin, retainer, rear sight elevating screw			For fixed and flex. guns.
A 13166	Pin, rear sight elevating knob.. ..			For fixed and flex. guns.
A 13167	Screw, rear sight windage scale ..	BD 7429	Screws, fixing, windgauge plate ..	For fixed and flex. guns.
A 13700	Pin, rear sight windage knob	BD 7416	Pins, fixing, head, windage screw ..	For fixed and flex. guns.
A 152429	Screw, windage, rear sight			For fixed and flex. guns.
A 152430	Scale, windage, rear sight	BD 7424	Plates, windgauge	For fixed and flex. guns.
A 152432	Knob, rear sight elevating screw ..			For fixed and flex. guns.
A 162810	Pin, stop, rear sight leaf	BD 5946	Pins, stop, leaf, backsight	For fixed and flex. guns.
A 163397	Spring, click plunger	BD 6941	Springs, plunger, click, backsight leaf..	For fixed and flex. guns.
A 163398	Plunger, rear sight elevating screw knob click.			For fixed and flex. guns.
B 8809	Knob, rear sight windage screw ..	BD 7486	Heads, milled, windgauge screw ..	For fixed and flex. guns.
B 110312	Screw, elevating rear sight			For fixed and flex. guns.
C 45961	Slide, rear sight..	BD 6937	Slides, backsight	For fixed and flex. guns.
C 45964	Leaf, rear sight assembly	BD 7415	Leaves, backsight, assembled	For fixed and flex. guns.
C 64906	Sight, rear, assembly	BD 7478	Sights, back, assembled	For fixed and flex. guns.
D 35236	Leaf, rear sight			For fixed and flex. guns.

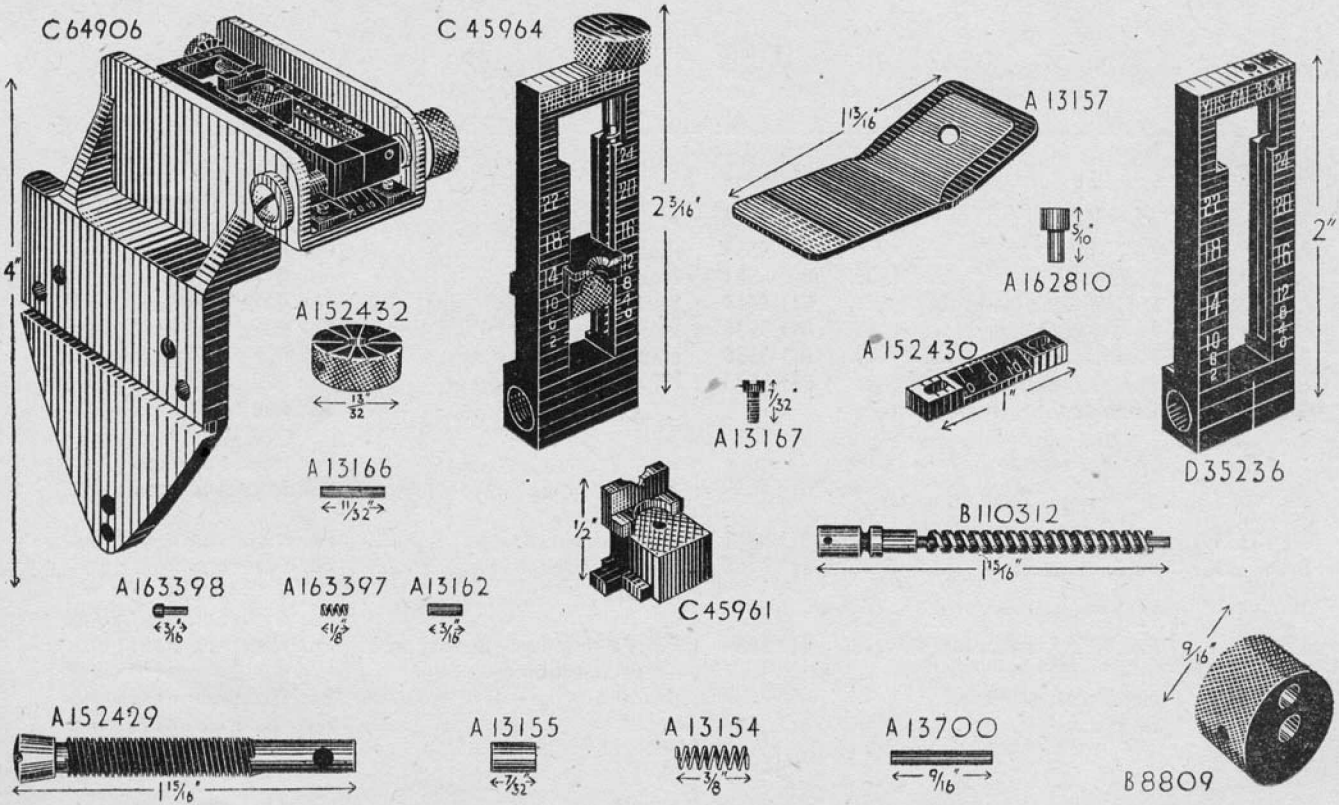
C64906
4"
C 45964
2 3/16"
1 13/16"
A 13157
5/10"
A162810
2"
D35236
A152432
13/32"
A 152430
1"
7/32"
A13167
A 13166
11/32"
1/2"
C45961
B110312
1 15/16"
A163398
3/16"
A163397
1/8"
A13162
3/16"
9/16"
B8809
A152429
1 15/16"
A 13155
7/32"
A 13154
3/8"
A13700
9/16"

AMERICAN S.N.L. NO.	AMERICAN S.N.L. DESIGNATION.	FORMER WEEDON CAT. NO.	ENGLISH DESIGNATION.	REMARKS.
A 20498	Pin, firing pin spring ...	BD 5555	Pins, retaining, firing pin spring.	For fixed and flex. guns.
A 20567	Pin, cocking lever	BD 5550	Pins, lever, cocking... ...	For fixed and flex. guns.
A 20570	Pin, ejector	BD 5553	Pins, ejector...	For fixed and flex. guns.
B 17497	Ejector	BD 5521	Ejectors	For fixed and flex. guns.
B 131265	Spring, sear, assembly ...	BD 5618	Springs, sear (w/– pin) ...	For fixed and flex. guns.
B 131317	Lever, cocking	BD 5538	Levers, cocking	For fixed and flex. guns.
B 147212	Handle, bolt...	BD 5530	Handles, cocking	For fixed and flex. guns.
B 147219	Plunger, extractor cam ...	BD 5574	Plungers, transporter ...	For fixed and flex. guns.
B 147222	Rod, driving spring assembly.			For fixed and flex. guns.
B 147227	Spring, driving, ·047 wire ...			For fixed and flex. guns.
B 147228	Spring, extractor cam plunger.	BD 5610	Springs, plunger, transporter	For fixed and flex. guns.
B 147229	Spring, firing pin	BD 5611	Springs, pin, firing	For fixed and flex. guns.
B 147299	Bolt, assembly	BD 7450	Blocks, breech (w/– recoil plate).	For fixed and flex. guns.
C 8462	Pin, firing			For fixed and flex. guns.
C 9186	Pin, firing, assembly ...	BD 5554	Pins, firing (w/– spring and pin assembled).	For fixed and flex. guns.
C 64135	Extractor, assembly ...			For fixed and flex. guns.
C 64137	Sear	BD 5598	Sears	For fixed and flex. guns.

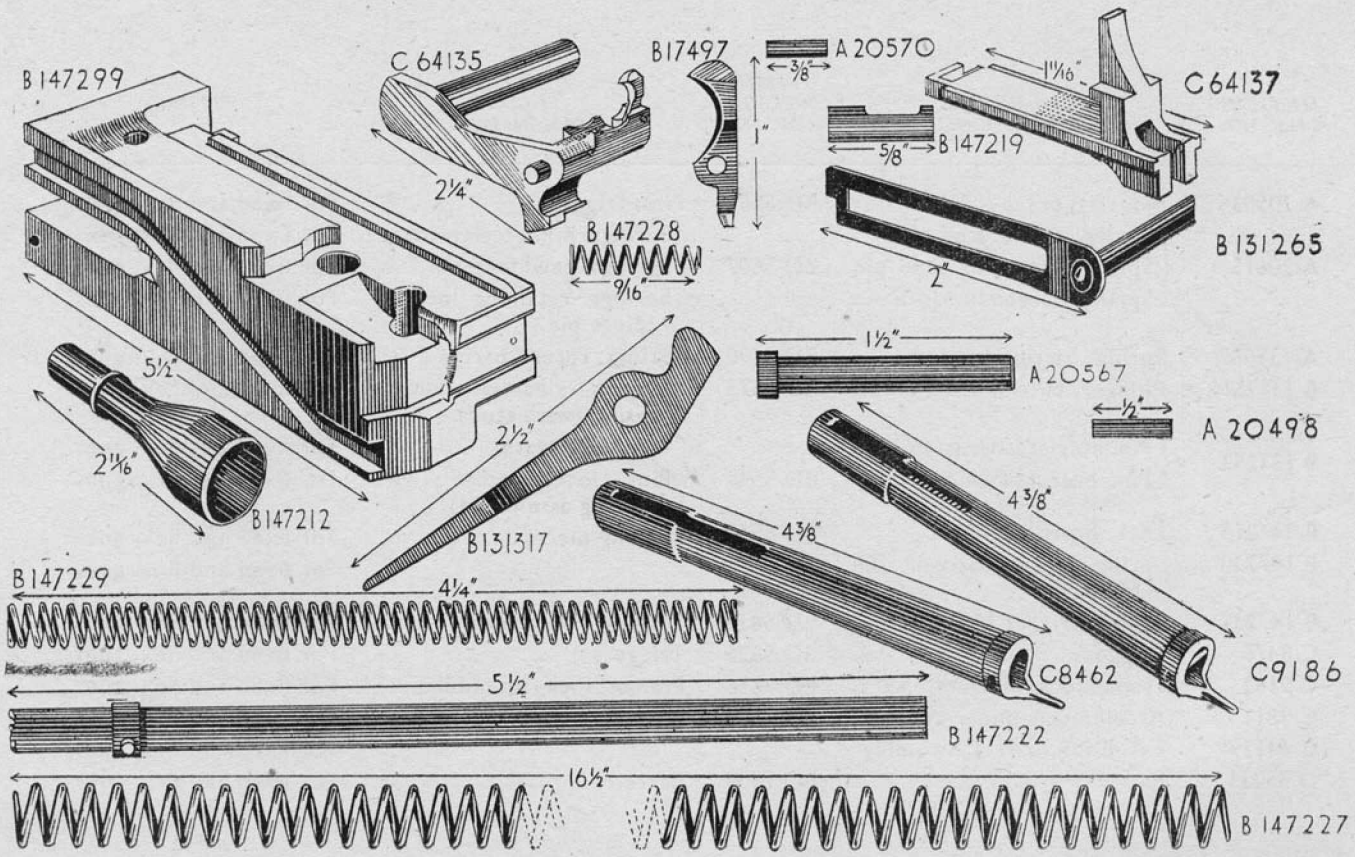
B 147299
C 64135
2¼"
B17497
1"
A 20570
3/8"
1 1/16"
C 64137
5/8"
B 147219
B 131265
2"
B 147228
9/16"
5½"
2 1/16"
B147212
2½"
B131317
1½"
A 20567
½"
A 20498
4 3/8"
4 3/8"
C8462
C9186
B 147229
4¼"
5½"
B 147222
16½"
B 147227

AMERICAN S.N.L. NO.	AMERICAN S.N.L. DESIGNATION.	FORMER WEEDON CAT. NO.	ENGLISH DESIGNATION.	REMARKS.
A 20503	Pin, trigger	BD 5559	Pins, trigger...	For fixed and flex. guns.
A 20615	Spring, accelerator pin ...	BD 5607	Springs, pin, accelerator ...	For fixed and flex. guns.
	Spring, belt feed pawl pin		Springs, pawl feed pin ...	For fixed and flex. guns.
	Spring, breech lock pin ...		Springs, retaining locking-piece pin.	For fixed and flex. guns.
A 135057	Spring, barrel plunger ...	BD 7490	Springs, return barrel ...	For fixed and flex. guns.
B 131251	Plunger, barrel, assembly ...	BD 5573	Plungers, barrel return spring (with stud).	For fixed and flex. guns.
B 131253	Pin, accelerator, assembly	BD 5549	Pins, accelerator	For fixed and flex. guns.
	Pin, breech lock, assembly		Pins, locking-piece (with spring assembled).	For fixed and flex. guns.
B 147214	Lock, breech	BD 5540	Locking-pieces	For fixed and flex. guns.
B 147230	Spring, locking barrel, ·208 point.			For fixed and flex. guns.
B 147231	Spring, trigger pin	BD 5620	Springs, pin, trigger ...	For fixed and flex. guns.
C 8476	Trigger	BD 5625	Triggers	For fixed and flex. guns.
C 9182	Frame, lock, assembly ...	BD 7636	Frames, lock, assembled ...	For fixed and flex. guns.
C 9811	Accelerator (under-cut lugs)	BD 5502	Accelerators...	For fixed and flex. guns.
C 64139	Extension, barrel, assembly			For fixed and flex. guns.
D 35233	Barrel	BD 7408	Barrels	For fixed and flex. guns.

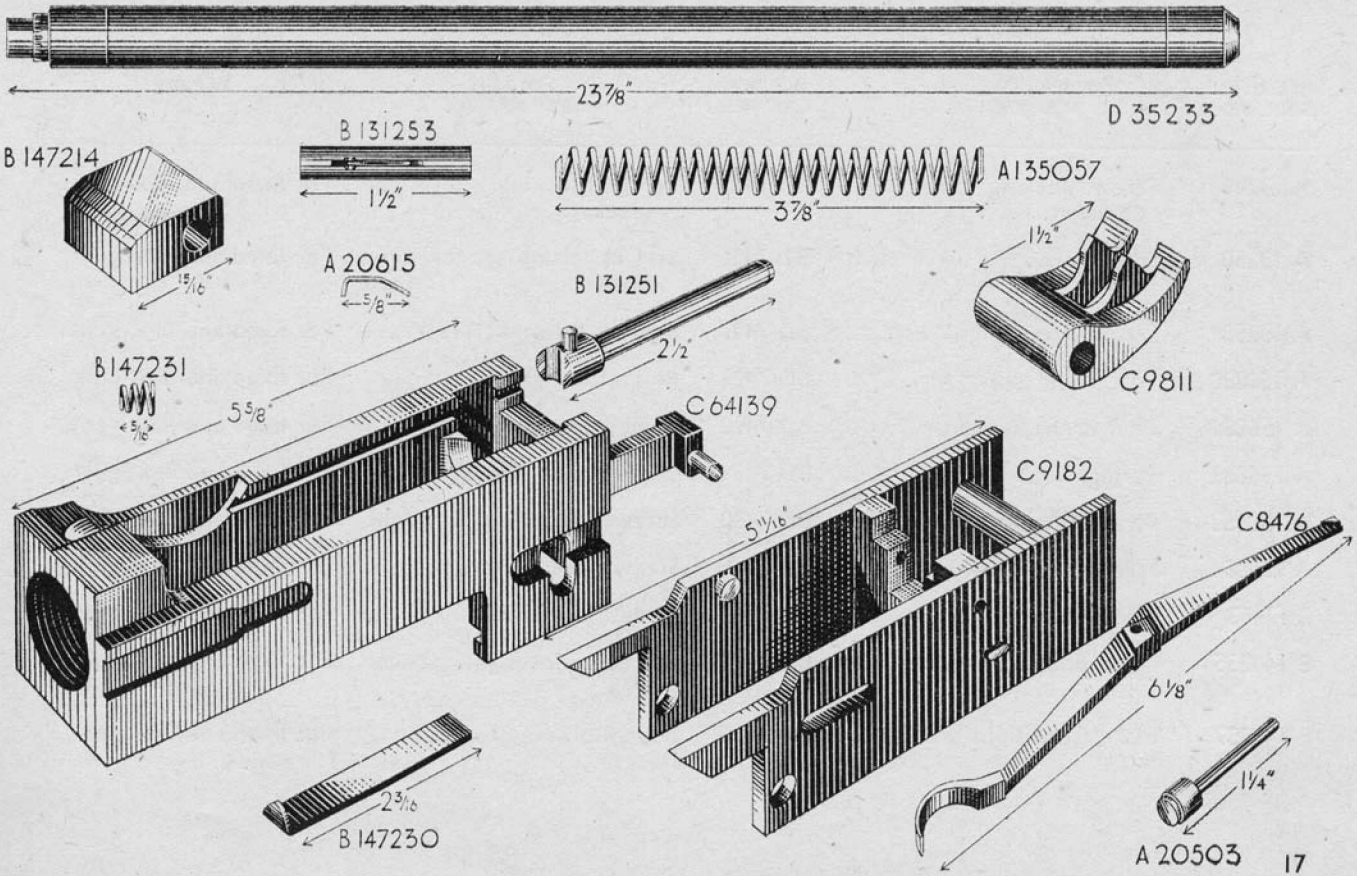
23 7/8"
D 35233
B 147214
15/16"
B 131253
1 1/2"
A 135057
3 7/8"
1 1/2"
C 9811
A 20615
5/8"
B 131251
2 1/2"
B 147231
5/16"
5 5/8"
C 64139
C 9182
5 11/16"
C 8476
6 1/8"
2 3/16
B 147230
1 1/4"
A 20503

AMERICAN S.N.L. NO.	AMERICAN S.N.L. DESIGNATION.	FORMER WEEDON CAT. NO.	ENGLISH DESIGNATION.	REMARKS.
A 13249	Screw, locking front sight bracket.	BD 7428	Screw, locking, foresight bracket.	For fixed and flex. guns.
A 13250	Screw, clamping front sight	BD 7426	Screws, clamping, foresight blade.	For fixed and flex. guns.
A 13258	Screw, front sight bracket	BD 7427	Screws, foresight bracket...	For fixed and flex. guns.
A 156880	Post, front sight	BD 7422	Posts, foresight	For fixed and flex. guns.
A 156881	Plunger, front sight ...	BD 7420	Plungers, post, foresight ...	For fixed and flex. guns.
A 156882	Spring, front sight	BD 7434	Springs, post, foresight ...	For fixed and flex. guns.
A 156883	Screw, retaining, front sight	BD 7430	Screws, retaining foresight	For fixed and flex. guns.
A 156884	Screw, bearing, front sight	BD 7425	Screws, post, foresight ...	For fixed and flex. guns.
B 17463	Blade, front sight	BD 5507	Blades, foresight	For fixed and flex. guns.
B 144235	Sight, bracket, front, assembly.	BD 7477	Brackets, foresight, assembled.	For fixed and flex. guns.
B 144237	Body, front sight bracket ...	BD 7410	Bodies, bracket, foresight ...	For fixed and flex. guns.

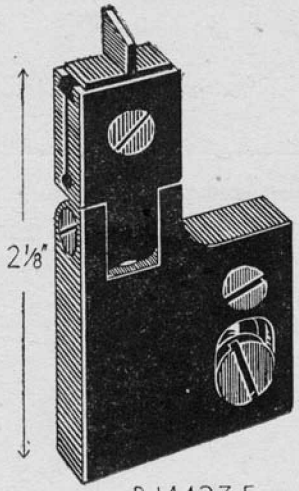

B 144235

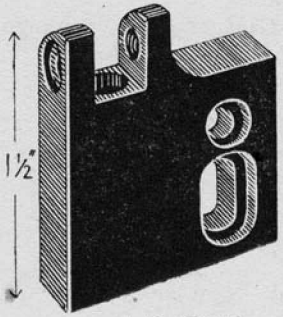

B 144237

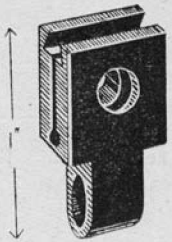

A 156880

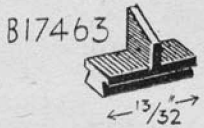

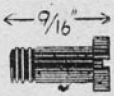

A 156884

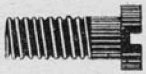

A 13258

A 13250

A 156881

A 156882

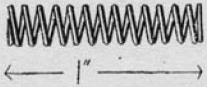

A 156883

A 13249

AMERICAN S.N.L. NO.	AMERICAN S.N.L. DESIGNATION.	FORMER WEEDON CAT. NO.	ENGLISH DESIGNATION.	REMARKS.
C 59736	Oiler, rectangular, 12 oz., with cap and chain.	BD 5833	Cans, oil, rectangular, ·30 in., U.S.A.	For fixed and flex. guns.
C 74620	Mechanism, elevating, assembly.			
D 7327	Machine, gun tripod mount, Cal. ·30, M.2.	BD 7540	Mountings, tripod, Browning M.G., ·30 in., M.2.	
49–1–84	Chest, ammunition belt, Cal. ·30 (250 rd.).	BD 5827	Boxes, belt, ammunition, Browning ·30 in. M.G., U.S.A.	For fixed and flex. guns.

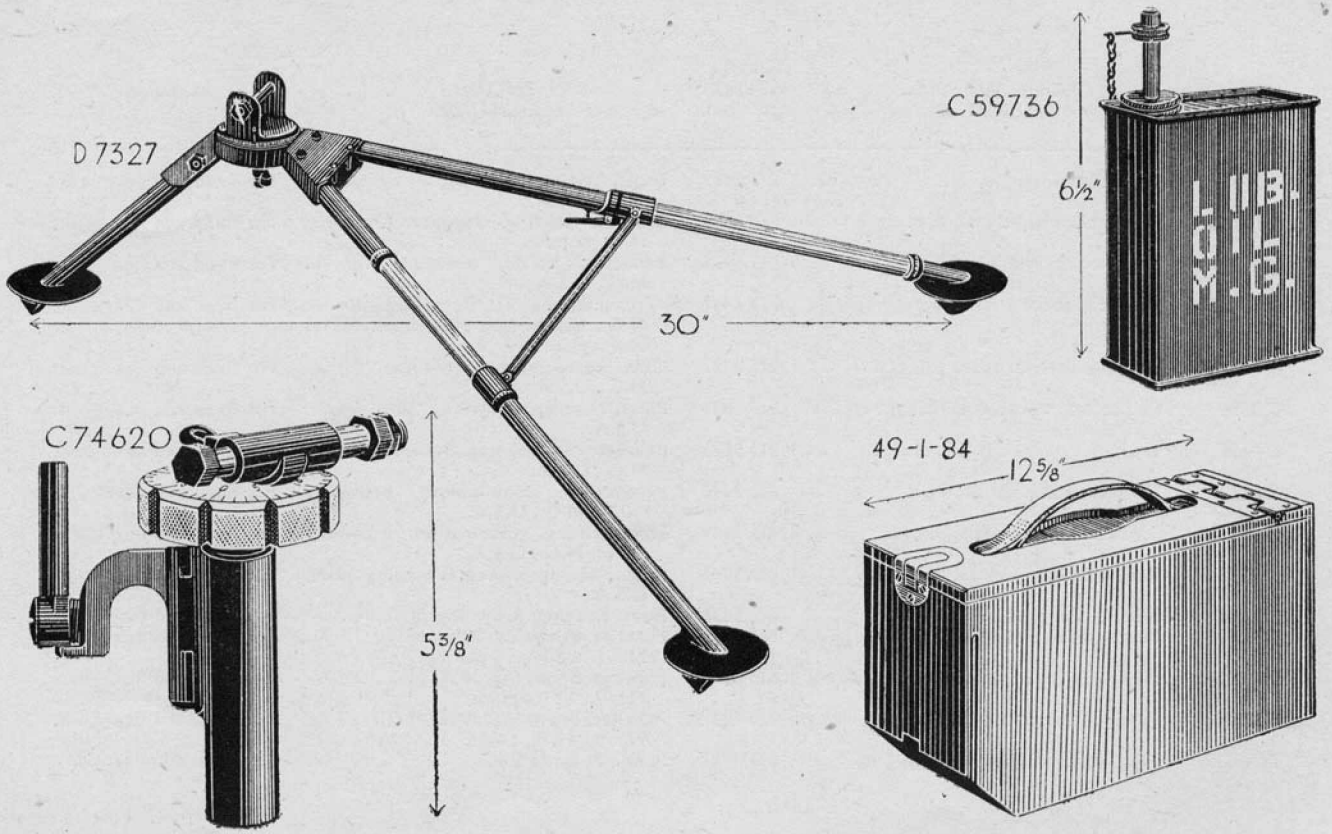
D 7327
30"
C59736
6½"
LUB.
OIL
M.G.
C74620
5⅜"
49-1-84
12⅝"

AMERICAN S.N.L. NO.	AMERICAN S.N.L. DESIGNATION.	FORMER WEEDON CAT. NO.	ENGLISH DESIGNATION.	REMARKS.
B 6940	Tool, combination	BD 5839	Tools, combination, Browning ·30 in. M.G., U.S.A.	For fixed and flex. guns.
B 108828	Brush, chamber cleaning, M.6 ..	BD 5825	Brushes, cleaning, chamber, Browning M.G., U.S.A.	For fixed and flex. guns.
B 147001	Reflector, barrel, Cal. ·30	BD 5931	Reflector, barrel, Browning ·30 in. M.G., U.S.A.	For fixed and flex. guns.
B 147277	Wrench, socket, front barrel bearing plug.	BD 7447	Wrenches, barrel, Browning ·30 in. M.G., U.S.A. (for plug, front barrel bearing).	For fixed and flex. guns.
B 147310	Can, tubular (for spare parts).. ..	BD 7491	Cans, spare parts, Browning ·30 in. M.G., U.S.A.	For fixed and flex. guns.
C 3854	Extractor, ruptured cartridge, Mk. IV	BD 5831	Plugs, clearing, Browning ·30 in. M.G., U.S.A.	For fixed and flex. guns.
C 4035	Brush, cleaning, Cal. ·30, M.2	BD 5826	Brushes, rod, cleaning, Browning ·30 in. M.G., U.S.A.	For fixed and flex. guns.
C 68334	Wrench, combination, M.6	BD 7446	Wrenches, combination, Browning ·30 in. M.G., U.S.A.	For fixed and flex. guns.
C 68338	Screwdriver, combination, M.1 ..	BD 7445	Screwdrivers, combination, Browning ·30 in. M.G., U.S.A.	For fixed and flex. guns.
D 8237	Rod, cleaning, jointed, M.1	BD 5949	Rods, cleaning, jointed, Browning ·30 in., U.S.A.	For fixed and flex. guns.
D 8398	Rod, cleaning, M.2	BD 5838	Rods, cleaning, Browning ·30 in., U.S.A.	For fixed and flex. guns.
TCFX2F	Punch, drive pin, special, ·08 pt. ..	BD 5835	Punches, Browning ·30 in. M.G., U.S.A., No. 1, ·08 in. × ¾ point.	For fixed and flex. guns.
TCFX2H	Punch, drive pin, special, ·12 pt., 3 long	BD 5836	Punches, Browning ·30 in. M.G., U.S.A., No. 2, ·12 in. point.	For fixed and flex. guns.
TCFX2K	Punch, drive pin, special, ·18 pt., 3 long	BD 5837	Punches, Browning ·30 in. M.G., U.S.A., No. 3, ·18 in. point.	For fixed and flex. guns.
THBX1A	Plier, side-cutt, parallel jaw, 6 in. ..	BD 4783	Pliers, M.G., U.S.A.	For fixed and flex. guns.

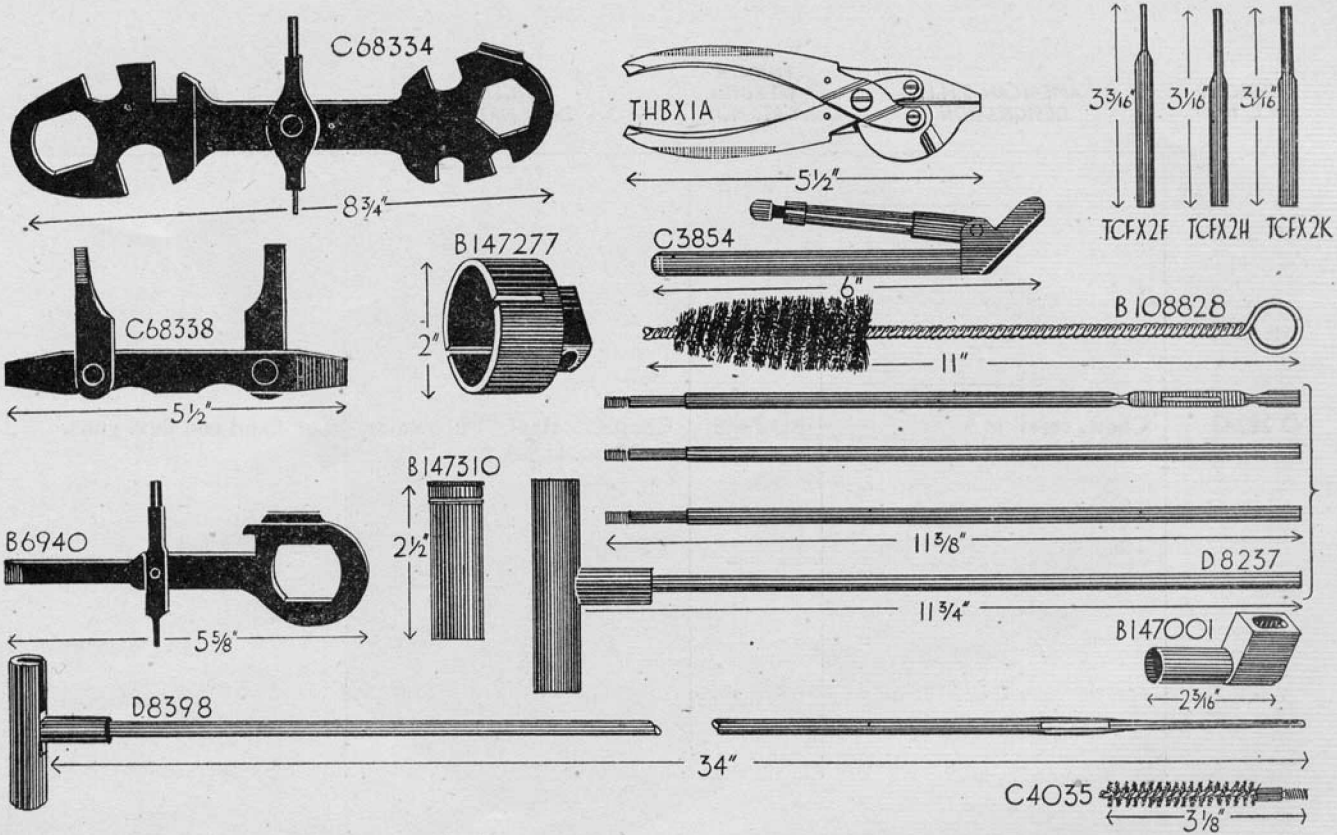
C68334
8¾"
THBX1A
5½"
3 3/16"
3 1/16"
3 1/16"
TCFX2F
TCFX2H
TCFX2K
C3854
6"
B147277
2"
C68338
5½"
B108828
11"
B147310
2½"
B6940
5⅝"
11⅜"
D8237
11¾"
B147001
2 3/16"
D8398
34"
C4035
3⅛"

AMERICAN S.N.L. NO.	AMERICAN S.N.L. DESIGNATION.	FORMER WEEDON CAT. NO.	ENGLISH DESIGNATION.	REMARKS.
D 28243	Chest, steel, M.5	BD 7448	Chests, steel, Browning ·30 in., U.S.A.	For fixed and flex. guns.

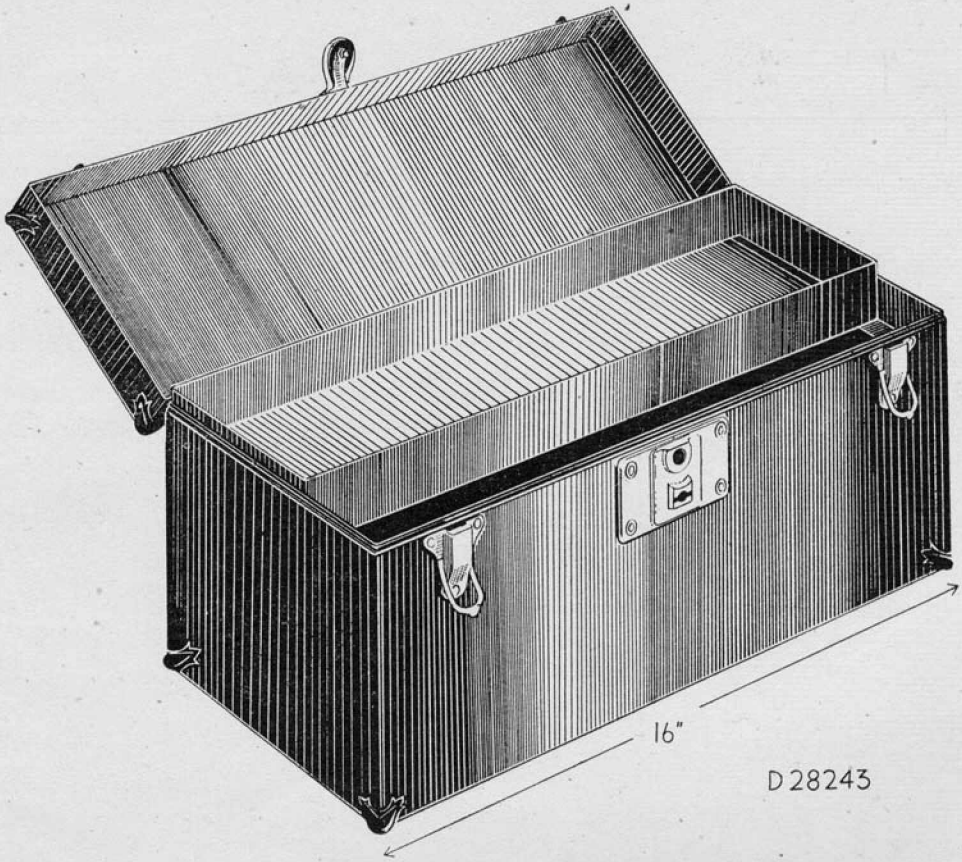
16"
D 28243

AMERICAN S.N.L. NO.	AMERICAN S.N.L. DESIGNATION.	FORMER WEEDON CAT. NO.	ENGLISH DESIGNATION.	REMARKS.
C 6573	Case, cleaning rod, M.1 ...	BD 5927	Cases, cleaning rod, Browning ·30 in. M.G., U.S.A.	For fixed and flex. guns.
C 59656	Case, spare bolt, M.2 ...	BD 7443	Cases, breech block, Browning ·30 in. M.G., U.S.A.	For fixed and flex. guns.
C 59696	Envelope, spare parts, M.1...	BD 5930	Wallets, spare parts, Browning ·30 in. M.G., U.S.A.	For fixed and flex. guns.
D 7349	Roll, spare parts, M.13 ...	BD 5933	Rolls, spare parts, Browning ·30 in.	For fixed and flex. guns.
D 7389	Roll, tool, M.12	BD 5934	Rolls, tool, Browning ·30 in. M.G., U.S.A.	For fixed and flex. guns.
D 30653	Cover, tripod mount, M.2 ...	BD 7608	Covers, tripod mount, M.2	
D 30674	Cover, spare barrel, M.9 ...	BD 5929	Covers, spare barrel, M.9, Browning ·30 in. M.G., U.S.A.	For fixed and flex. guns.

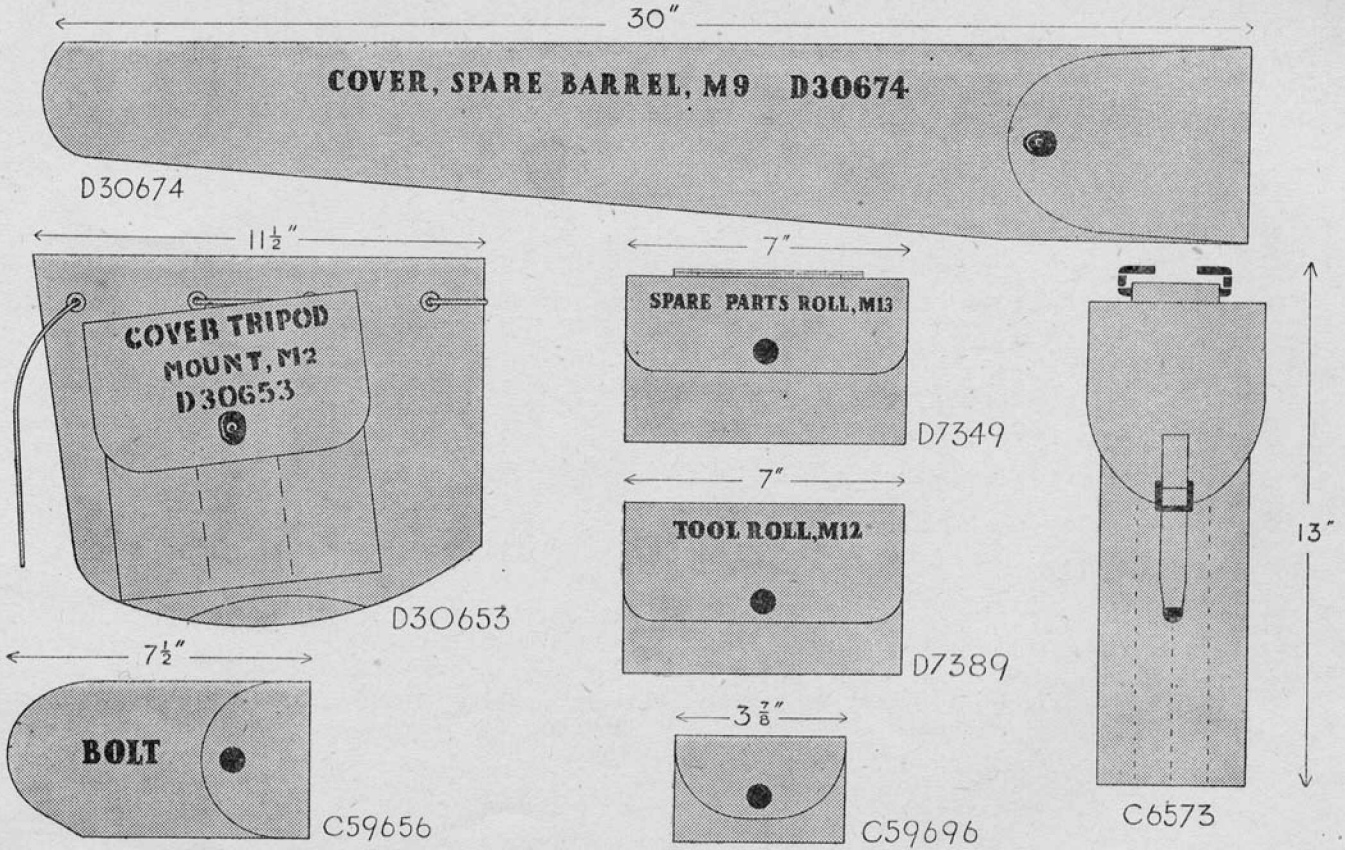

(1221.) 12919 Wt. 18595–8880. 5M. 8/42. A., P. & S., Ltd. 428.